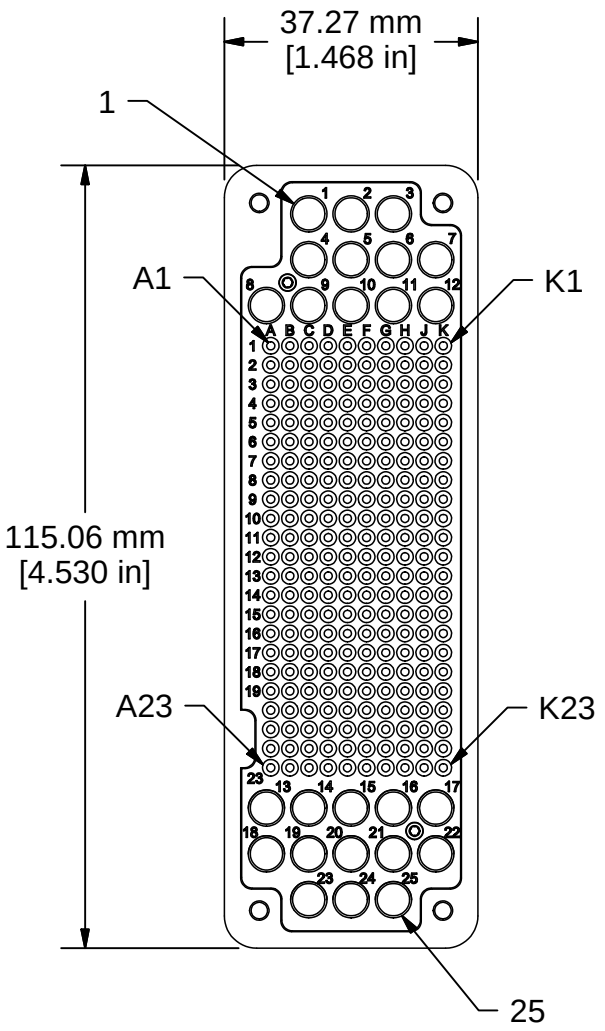

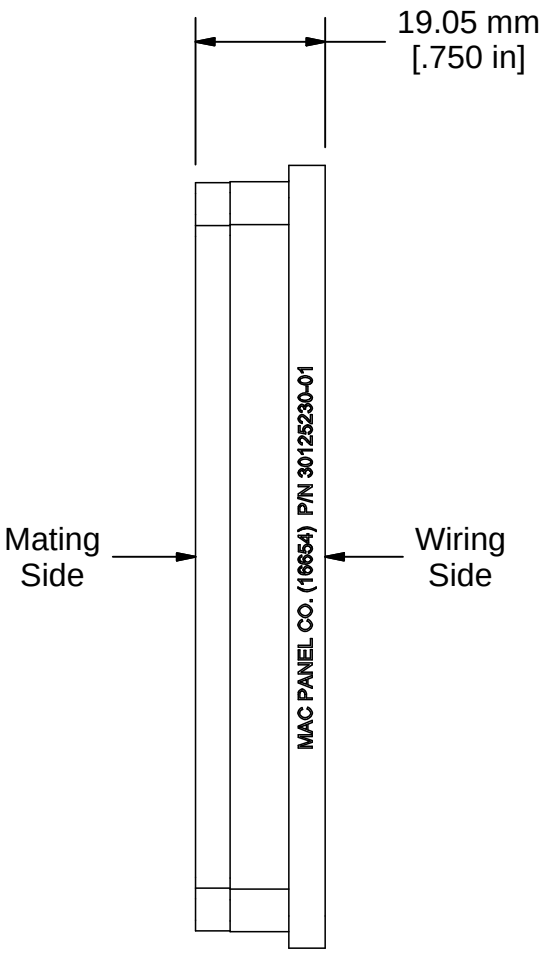

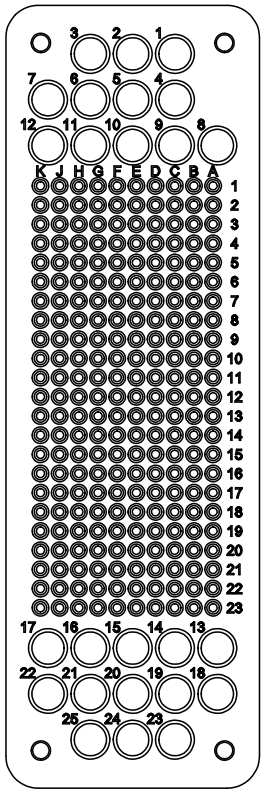

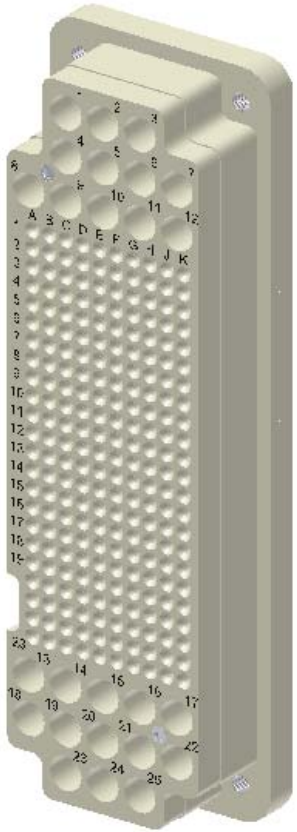

COMMENTS / NOTES

Supplied with 4 x 4-40 UNC mounting screws.

MACPANEL

WWW.MACPANEL.COM

DRAWN BY

DATE 3/15/2010

3rd angle projection

SHEET 1 OF 1

DESCRIPTION

Receiver Module,
25 Power / 230 Signal.

DRAWING NO.

30125230-01-CU

REVISION