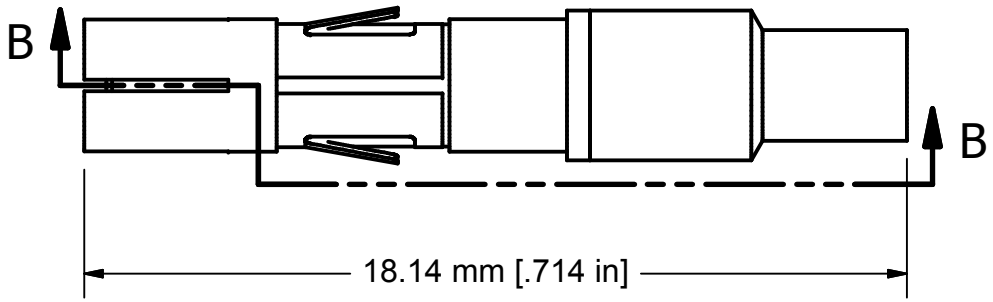

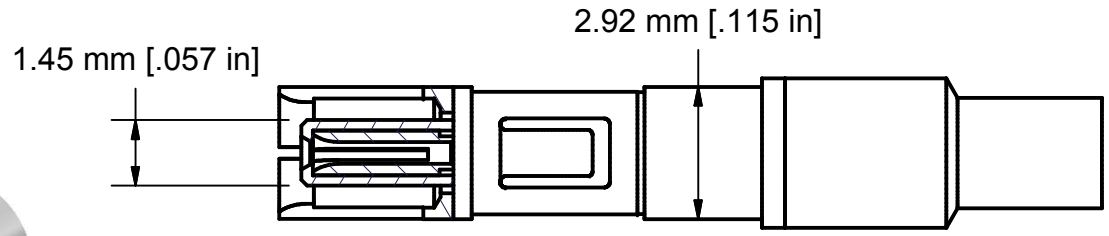

SECTION B-B

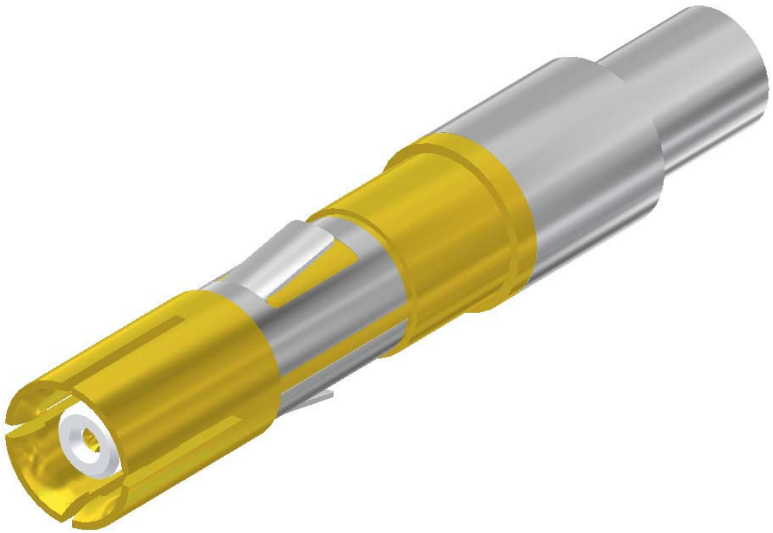

COMMENTS / NOTES

MAC-PANEL

WWW.MACPANEL.COM

DRAWN BY	DATE
DC	22/06/2009

3rd angle projection

SHEET 1 OF 1

DESCRIPTION: Contact, Receiver, Female, Micro Coax

DRAWING NO.: 40-120001-03-CU

REVISION: 0