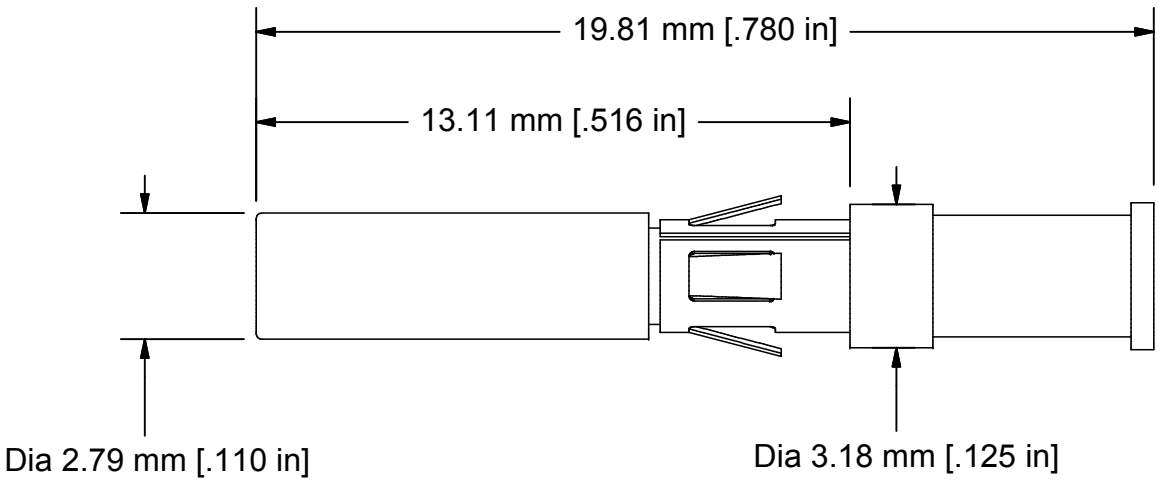

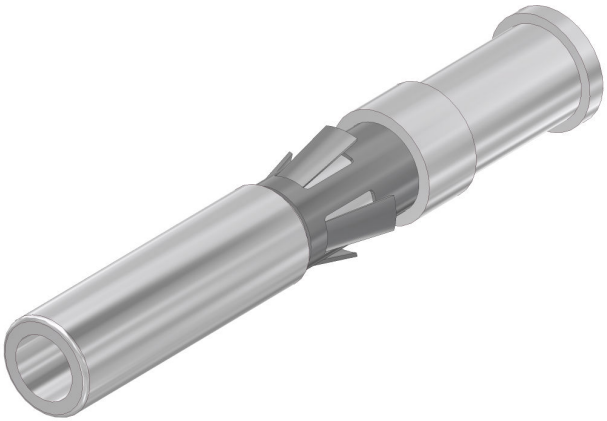

COMMENTS / NOTES

MACPANEL

WWW.MACPANEL.COM

DRAWN BY	DATE
DC	18/08/2008

3rd angle projection

SHEET 1 OF 1

DESCRIPTION: Contact, Receiver, Power, 23 amp, 14 awg

DRAWING NO. 40-120003-01-CU

REVISION A