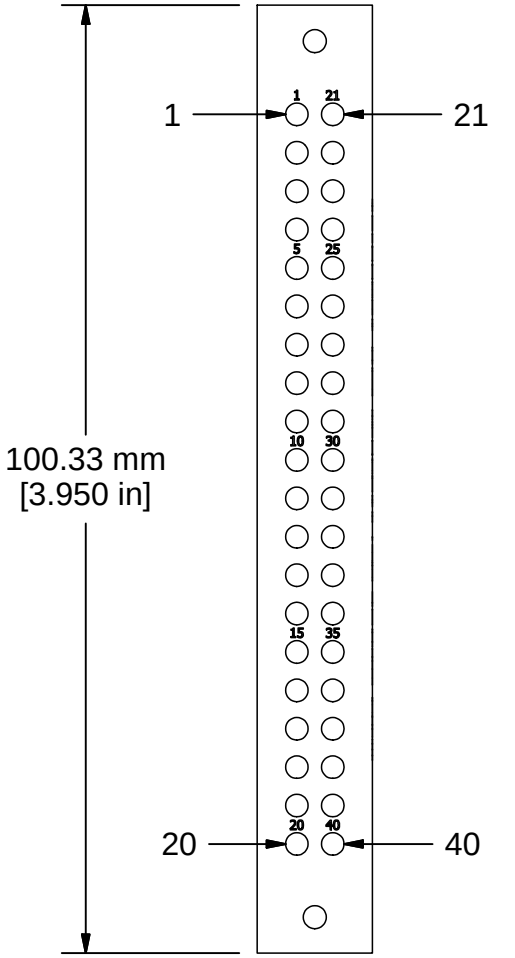

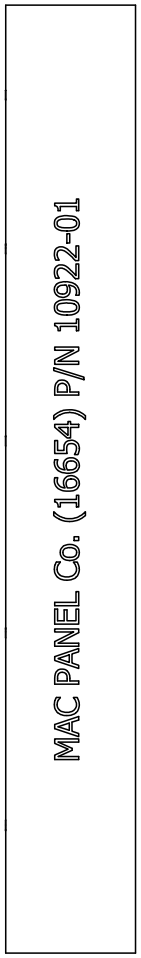

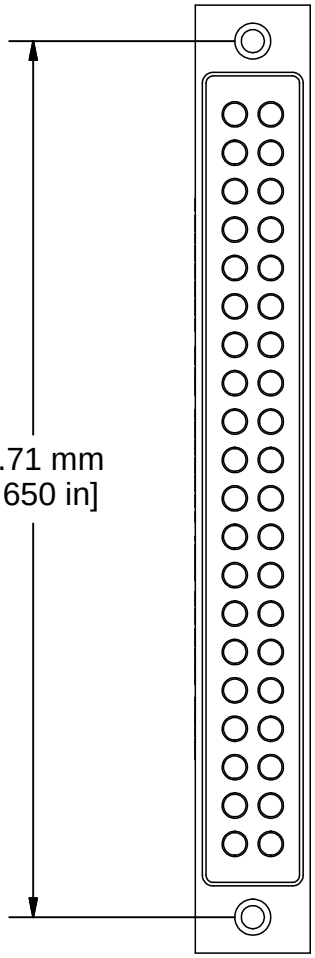

12.19 mm
[.480 in]

13.74 mm
[.541 in]

COMMENTS / NOTES

Supplied with mounting screws

MACPANEL

WWW.MACPANEL.COM

DRAWN BY

DATE 21/06/2012

3rd angle projection

SHEET 1 OF 1

DESCRIPTION

Receiver Module, Signal, 40 Position.

DRAWING NO. 10922-01-CU

REVISION