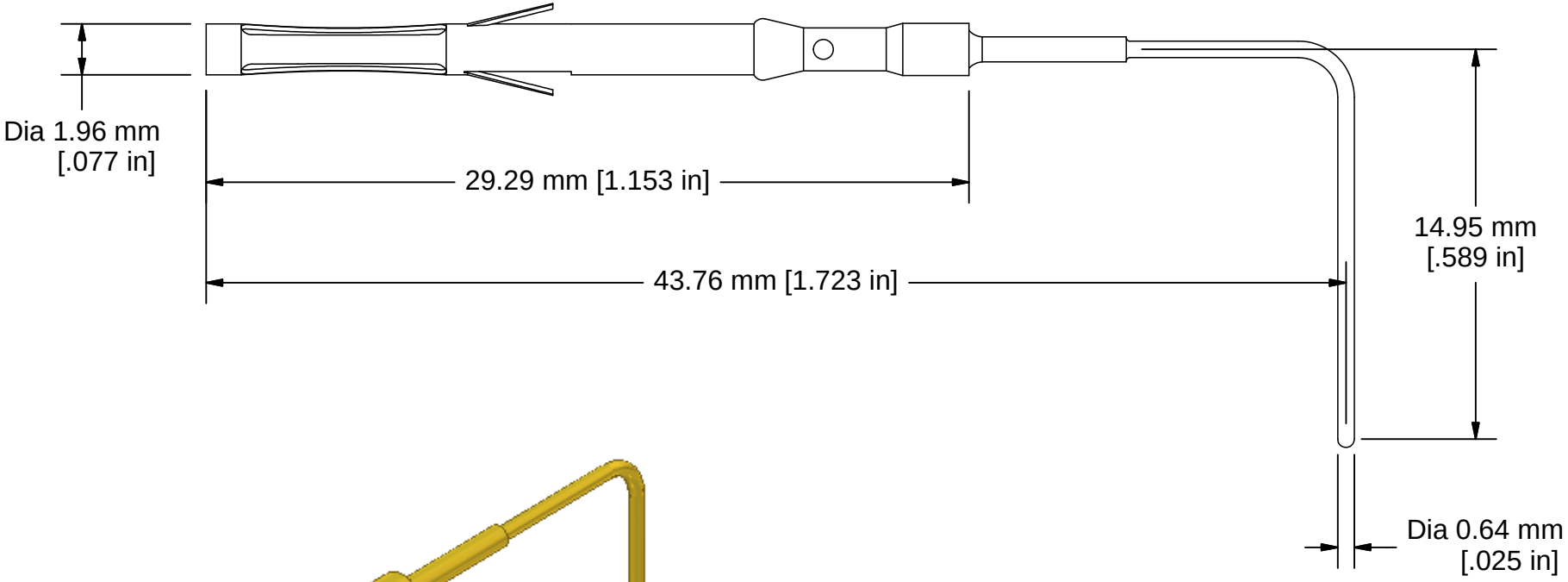


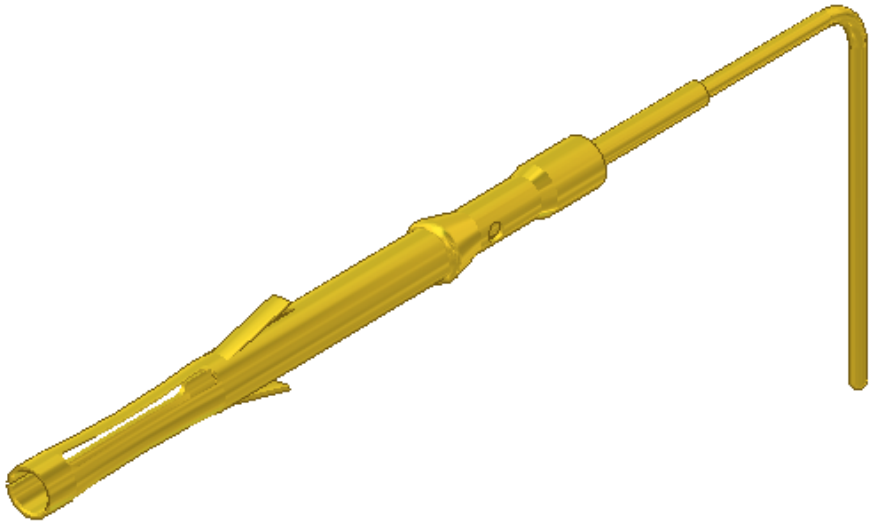

COMMENTS / NOTES

MACPANEL

WWW.MACPANEL.COM

DRAWN BY

DATE 19/04/2010

3rd angle projection

SHEET 1 OF 1

DESCRIPTION

Contact, Receiver, Signal, Female, PCB Mount, Long.

DRAWING NO.

0884027R-03-CU

REVISION